ARBEITSKREIS KOHLENSTOFF

DER DEUTSCHEN KERAMISCHEN GESELLSCHAFT E.V.

Soederberg electrodes: Production and application through the ages

Dr. Johann-Chr. Leye, Dr. Robert Becker

Herbsttagung Oct. 16th 2013, Freiberg

Outline

- Historical Overview
- Present situation
- Outlook
- Company Profile

Historical Overview

EAF running with baked/graph. Electrode

1st World War

Big rise in EAF performance
1,2m → 2m
12MVA → 100MVA

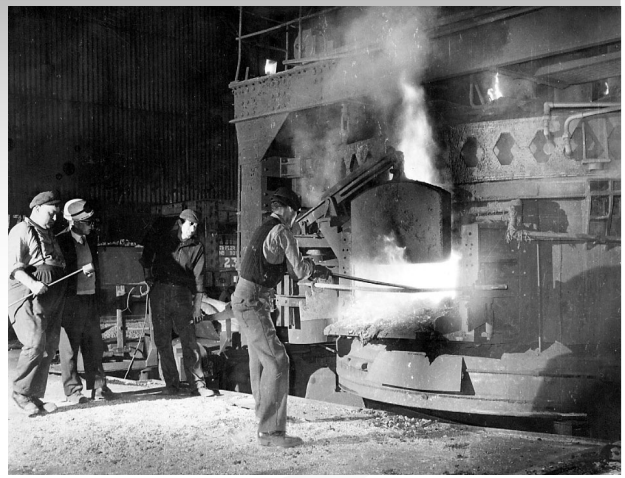

Carl Wilhelm Soederberg (1876-1955) First lab. trials with self-baking Electrodes 1910

1919
1st „self-baking“ Electrode (850mm) presented by Elkem

Early 90er Ferroatlantica developed ELSA electrode for Si-production

Present Situation

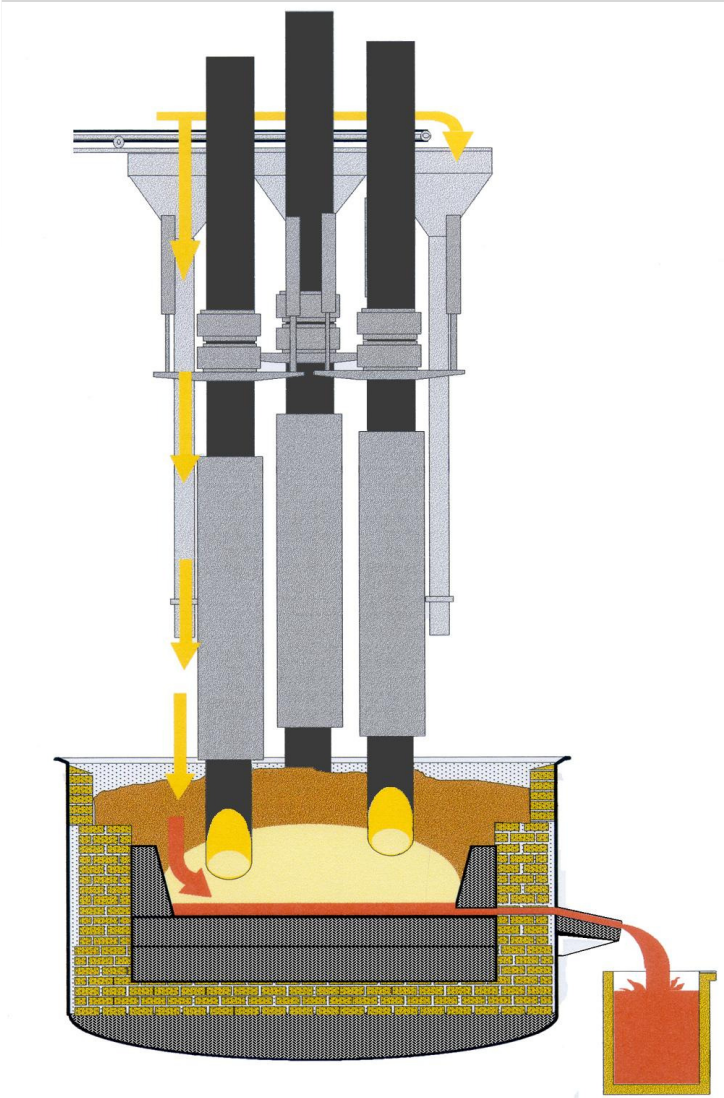

Application:

- EAF - Melting of steel scrap
- SAF- Ferroalloys, CaC_2, Si, P

Operation:

- Heating charge by electric arc
- 3 phases alternating current
- Electr.: ∅ 1-2m , L = 10m and higher
- 3 different Electrodes
- Joule heating

Present situation

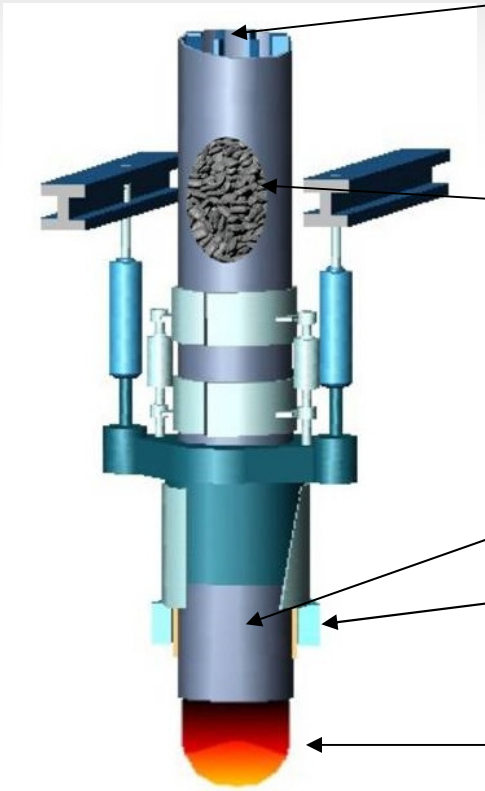

Fins

Graphite Core

Electrode paste

Casing

Contact clamps

Calc. Electrode

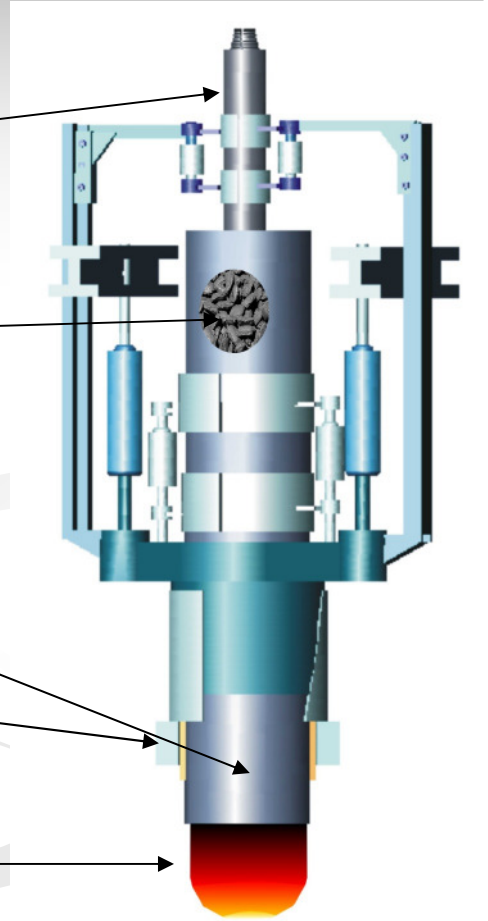

Soederberg electrode
(Ferroalloys production)

Composite electrode
(Silicon production)

Present situation

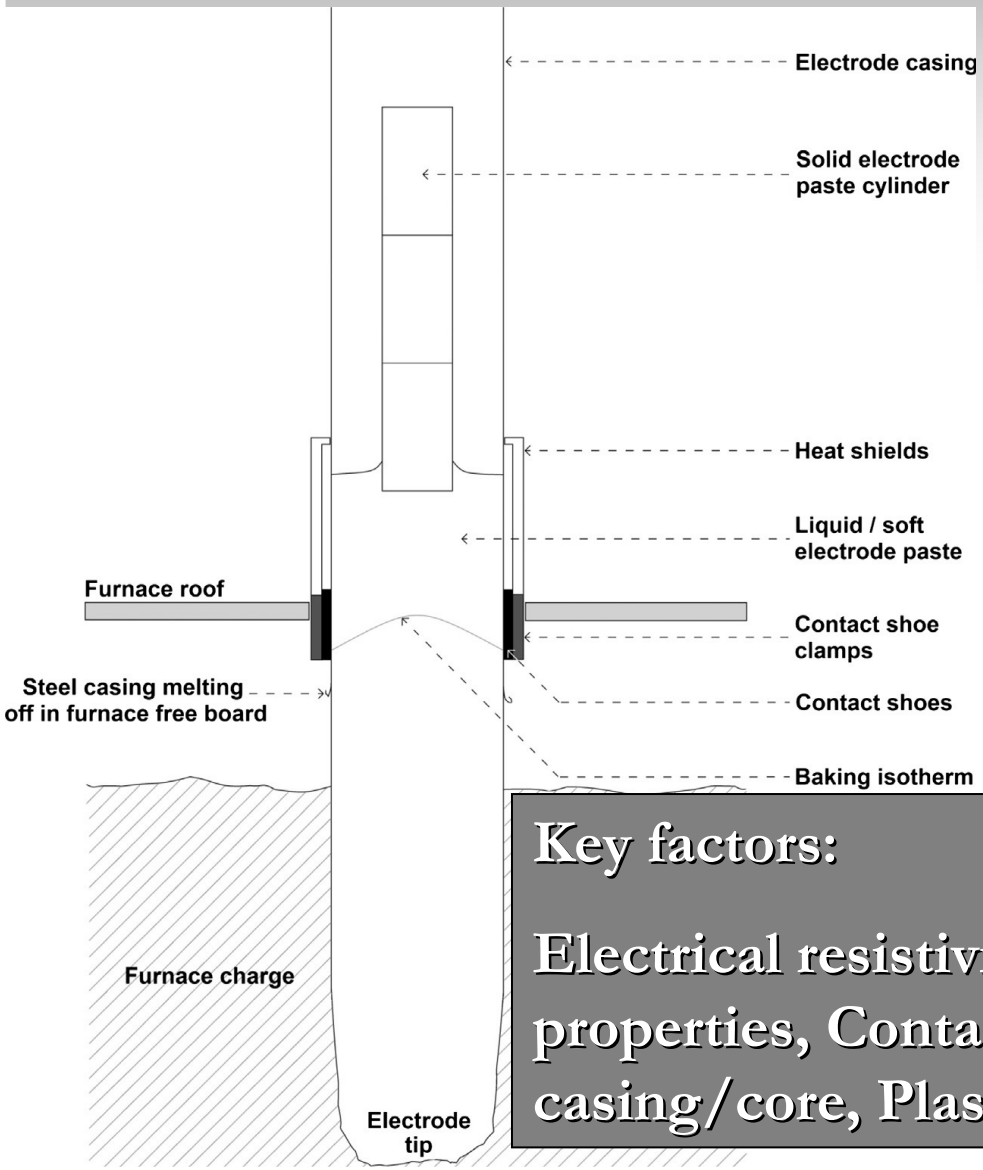

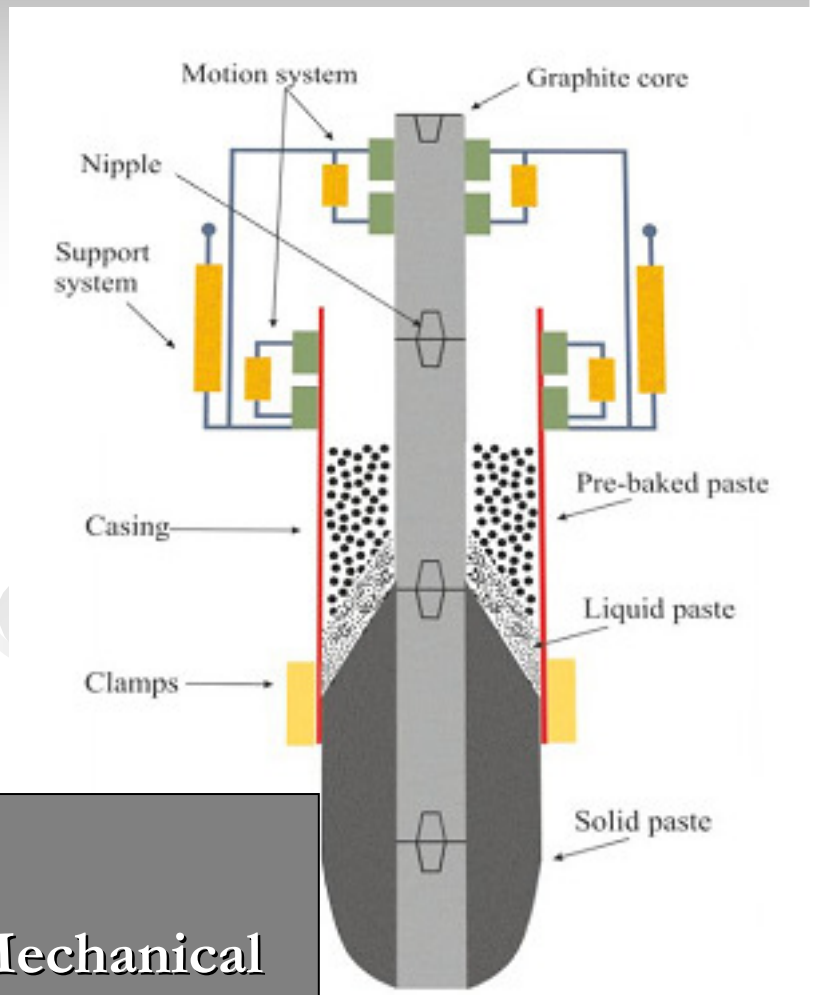

Key factors:

Electrical resistivity, Mechanical properties, Contact to the casing/core, Plasticity, Bridging

Present situation

Electrode paste: Dry material and Binder

Dry material:

- traditionally Anthracite
- Coke
- Graphite

Binder:

- Coal tar pitch (MP: 60-100 °C Mettler)

Outlook

- Highly productive plants→ Increasing size and load
- Regular shutdowns → Thermal shock resistance
- Higher purity
- Changing qualities of raw materials
- Environmental regulations and health care → low PAH

Rheinfelden Carbon GmbH & Co KG

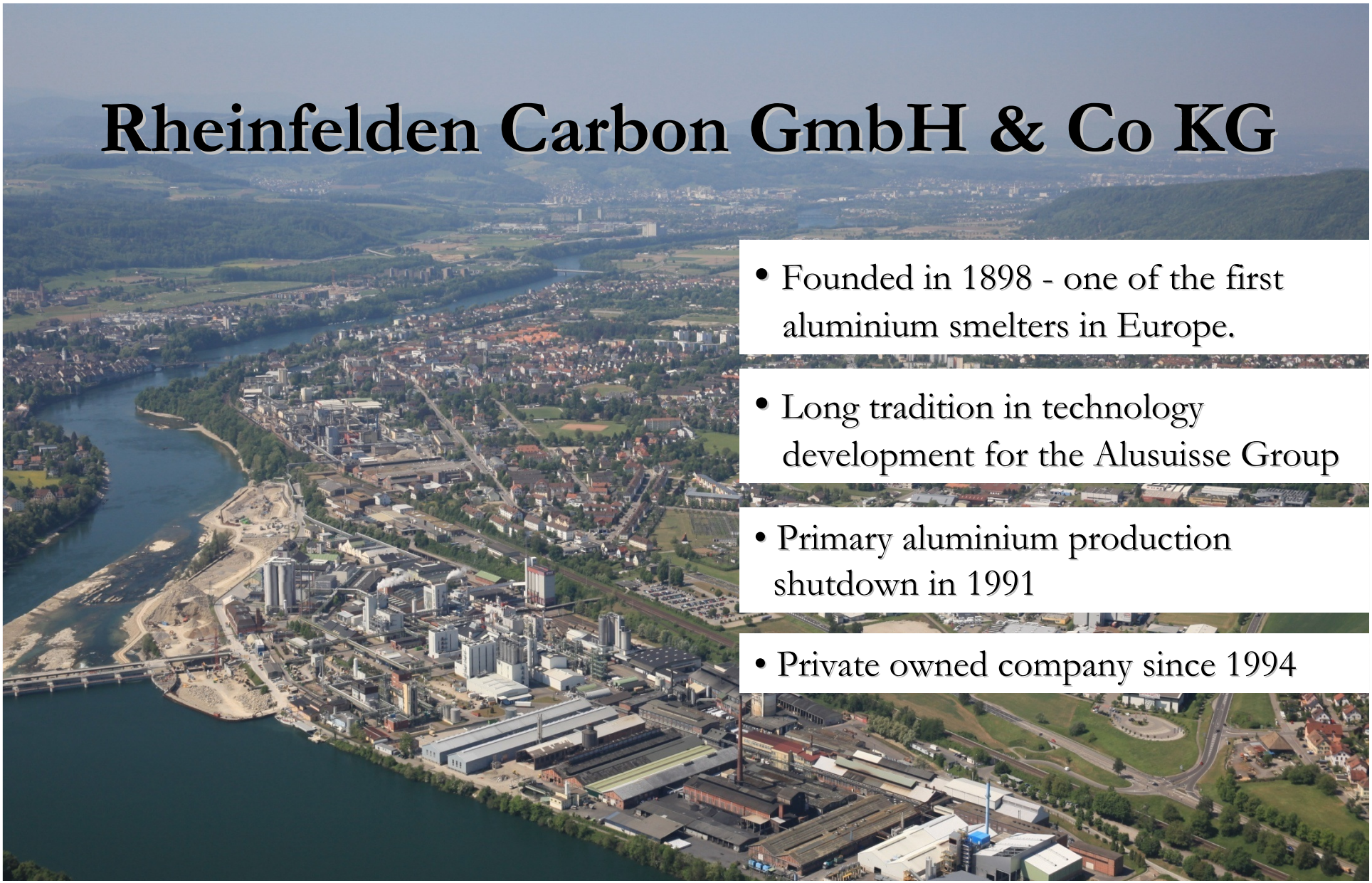

- Founded in 1898 - one of the first aluminium smelters in Europe.
- Long tradition in technology development for the Alusuisse Group
- Primary aluminium production shutdown in 1991
- Private owned company since 1994

Aluminium Rheinfelden today: 3 companies with 220 employees producing

Aluminium alloys, aluminium slugs and carbon products

Rheinfelden Carbon GmbH & Co KG

- **Products:** Soederbergpaste for submerged electric arc furnaces, collar paste, ramming paste

- **Production capacity:**
- Paste plant: 75 000 mt/a
  Anthracite calciner: 10 000 mt/a

Rheinfelden Carbon GmbH & Co KG

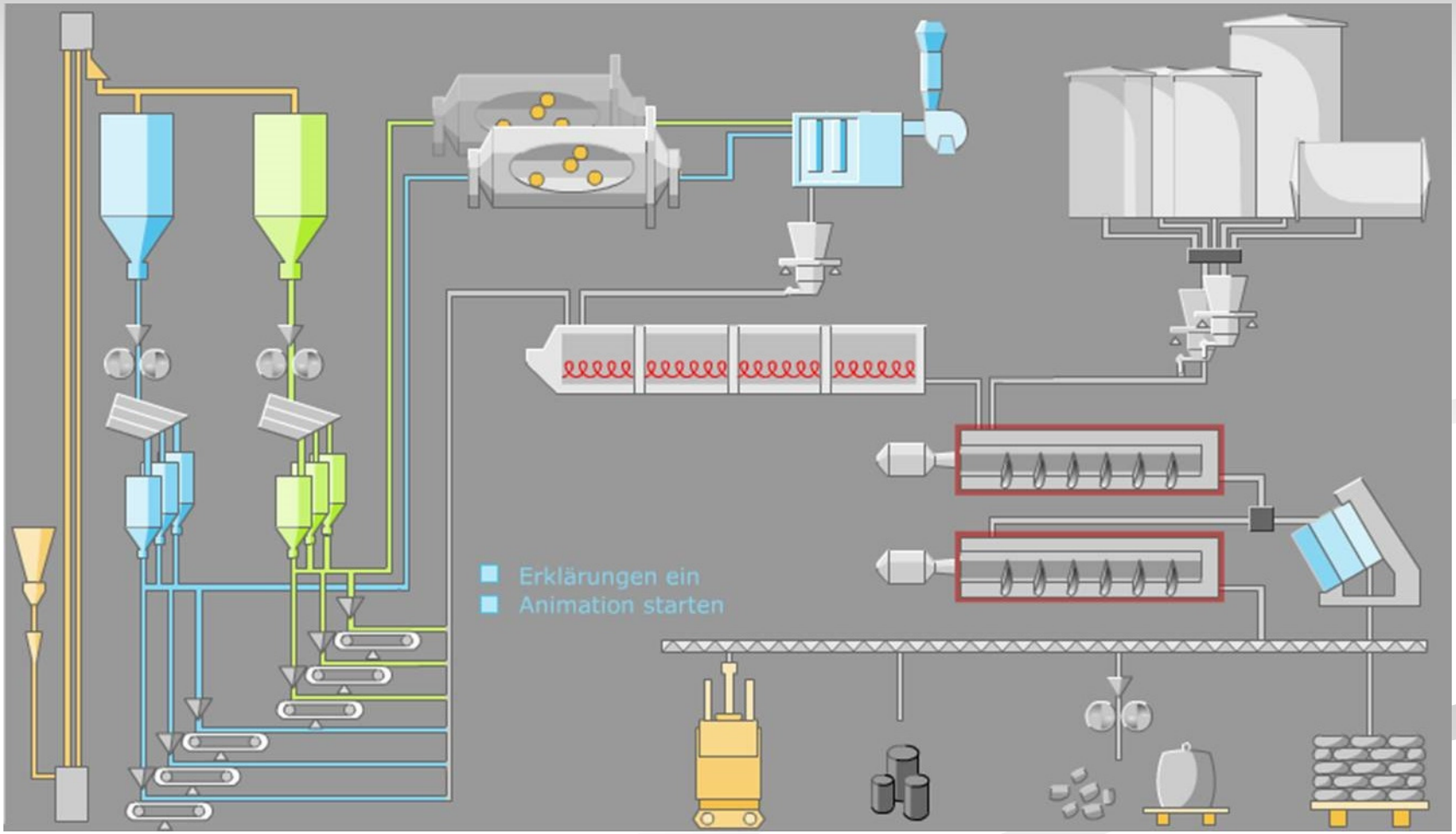

Rheinfelden Carbon GmbH & Co KG

Briketts

Cylinders

Rheinfelden Carbon GmbH & Co KG

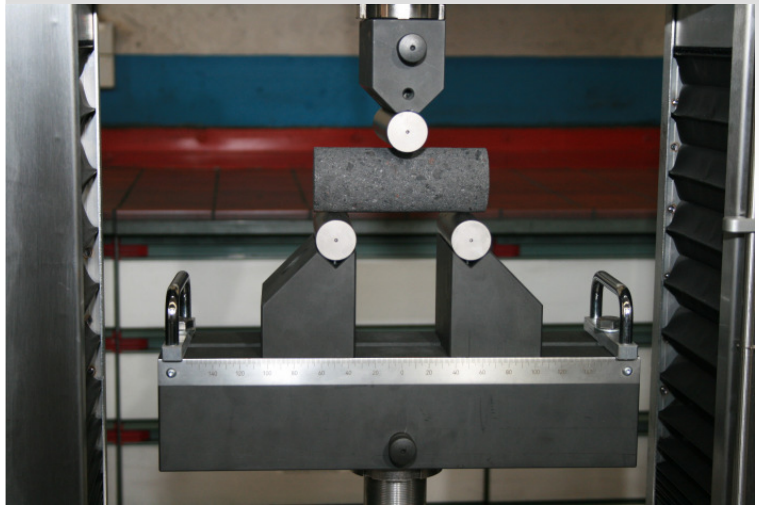

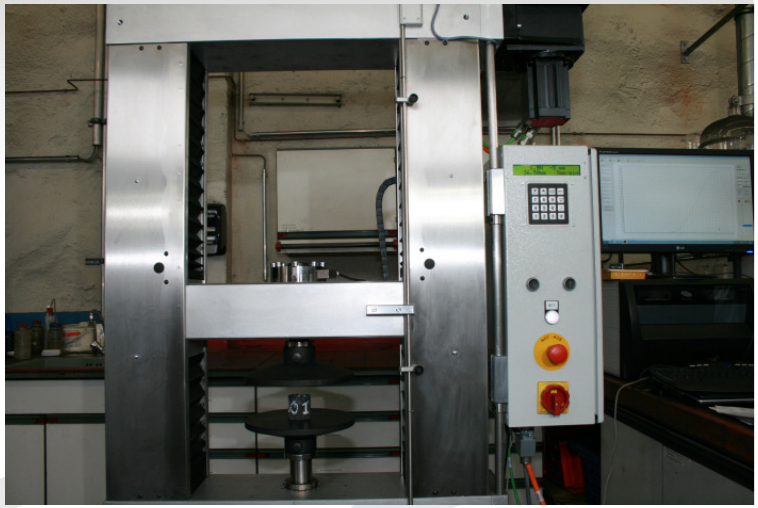

Thank you
for
your attention